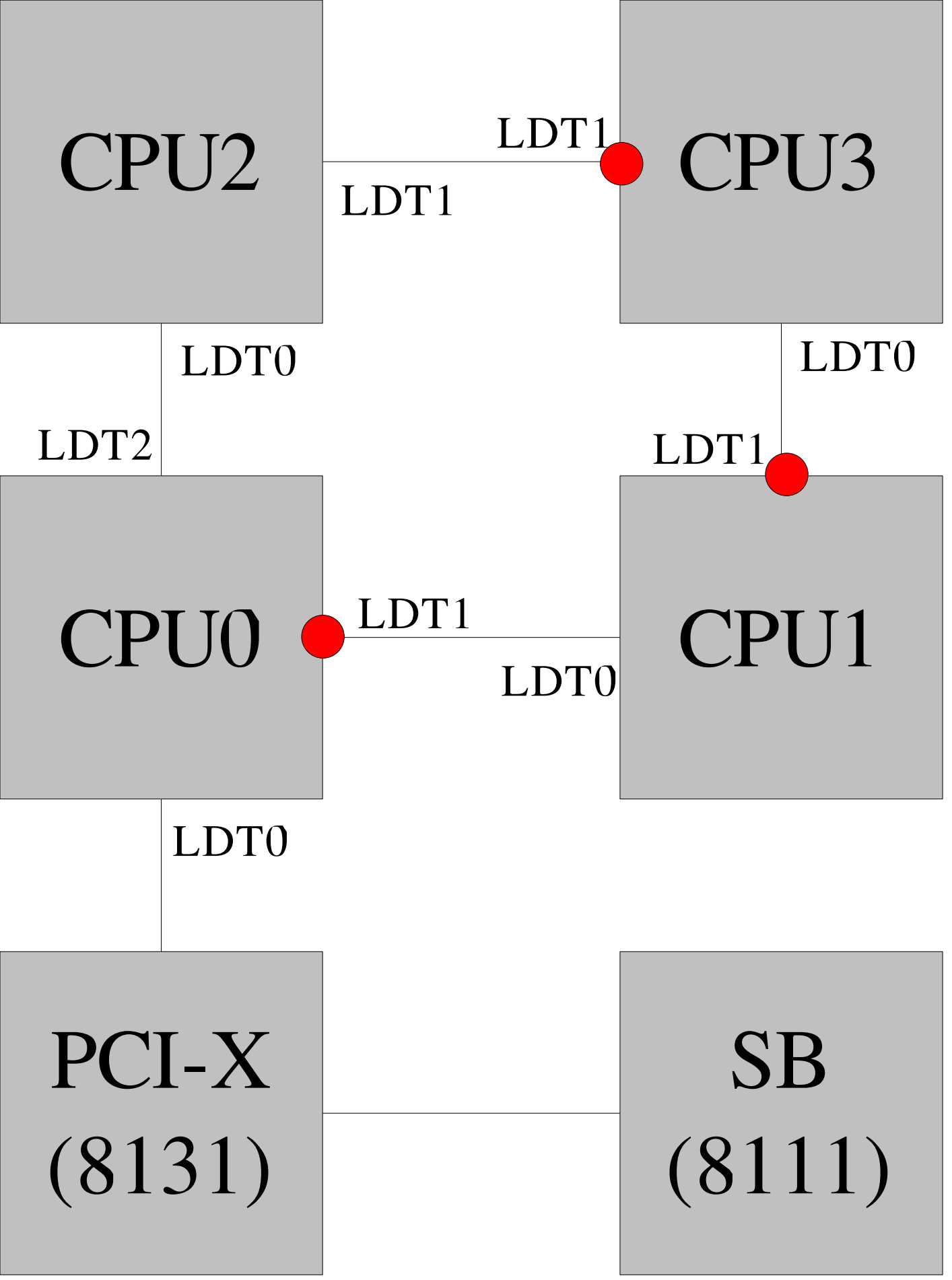
CPU2
CPU3
CPU0
CPU1
PCI-X
(8131)
SB
(8111)
LDT1
LDT1
LDT0
LDT0
LDT2
LDT1
LDT1
LDT0
LDT0